ROURA MATERIAL HANDLING

CLINTON TOWNSHIP, MI
586.790.6100
HOLLY SPRINGS, MS
662.252.1421
ROURAMH.COM

CHIP TUB ROTATOR BOX

RTB-CT-135 1/2 CU. YD

MADE IN USA

CONSTRUCTION:



- 10 gauge plate sides
- 10 gauge plate bottom
  - 1" drain w/ plug
  - 6" Semi Steel casters included
  - Box tube fork openings
- Painted Roura Green (other colors optional)
- Optional Items are Available Here
- Custom sizes & designs available upon request
- This box can be dumped using a forklift with a rotational fork attachment.
- **THIS ITEM IS NOT RETURNABLE**

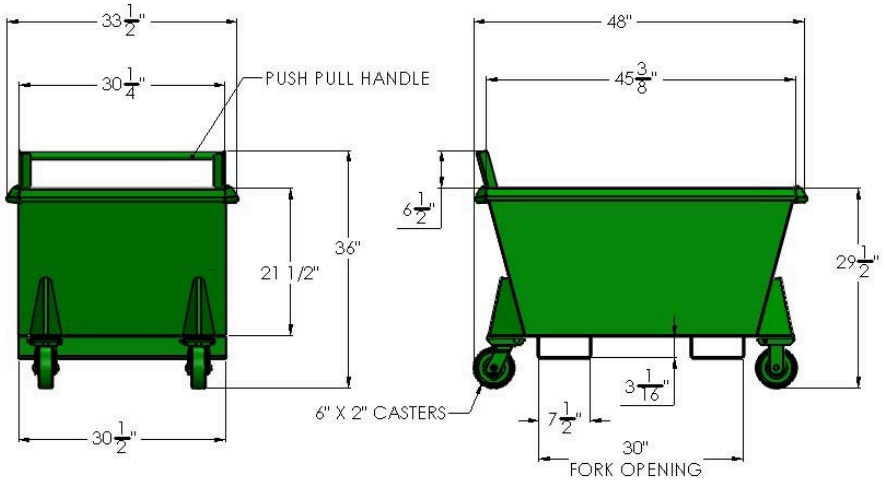

MODEL #	SIZE	L	W	H	FORK OPENING	LOAD CAPACITY	WEIGHT
RTB-CT-135	1/2 CU. YD	48"	33 1/2"	36"	3 1/16" X 30"	4,000 LBS	282 LBS

ROURA BUILT

"FOR ALL OF YOUR MATERIAL HANDLING NEEDS!"