ROURA MATERIAL HANDLING

CLINTON TOWNSHIP, MI
586.790.6100
HOLLY SPRINGS, MS
662.252.1421
ROURAMH.COM

RUGGED HOPPER

3T-3/16-550 2 CU. YD

MADE IN USA

CONSTRUCTION:

- 7 gauge plate body & 5/16" formed plate base.
  - Body is 100% continuous weld
- Standard Items:
  - Ductile Iron Handle
  - Secure Flip Latch
  - Mast Secure Chain
  - Standard Stops
- Painted Roura Green (other colors optional)
- Optional Items are Available Here

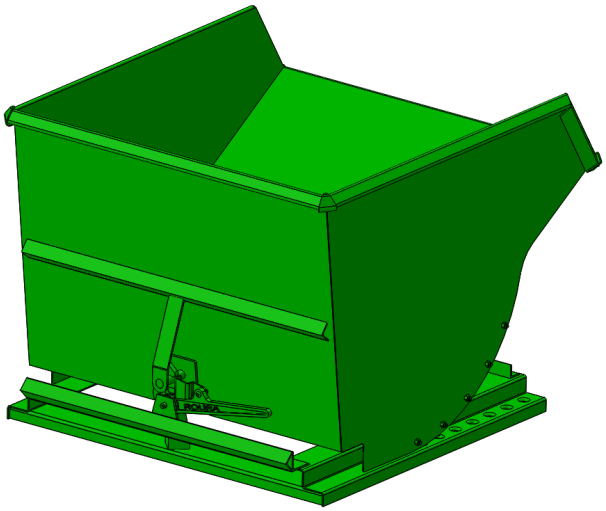

3T-3-16-550

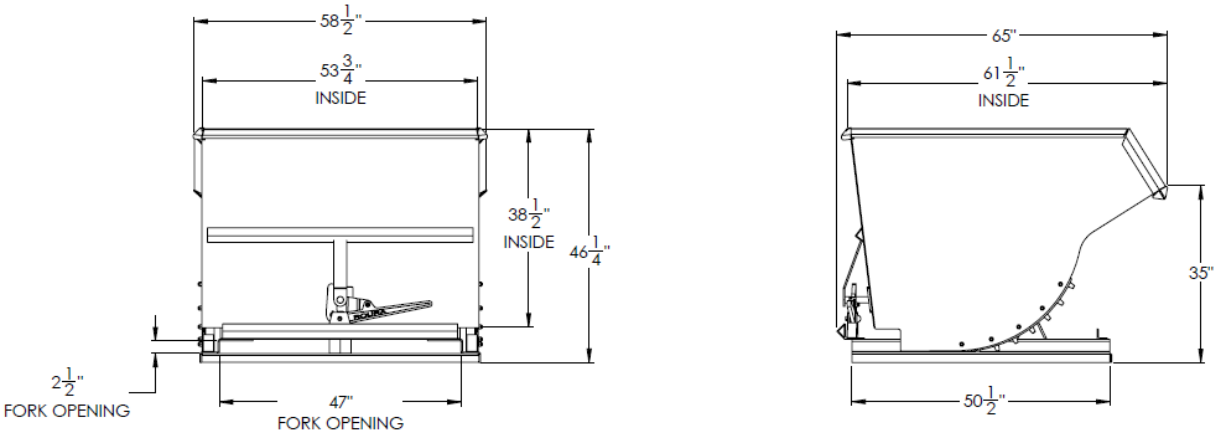

MODEL #	SIZE	L	W	H	LH	FORK OPENING	LOAD CAPACITY	WEIGHT
3T-3/16-550	2 CU. YD	65"	58 1/2"	46 1/4"	35"	2 1/2" X 47"	6,000 LBS	840 LBS

ROURA BUILT

"FOR ALL OF YOUR MATERIAL HANDLING NEEDS!"