ROURA
MATERIAL HANDLING

CLINTON TOWNSHIP, MI
586.790.6100
HOLLY SPRINGS, MS
662.252.1421
ROURAMH.COM

RUGGED HOPPER

3T-3/16-1080 4 CU. YD

MADE IN USA

CONSTRUCTION:

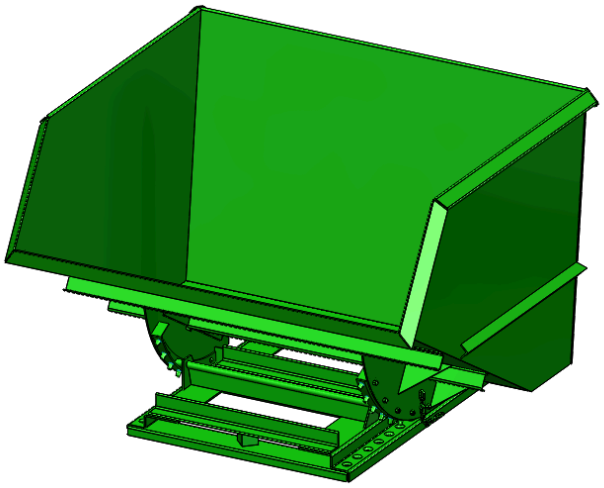

- 7 gauge plate body & 5/16" formed plate base.
  - Body is 100% continuous weld
- Standard Items:
  - Ductile Iron Handle
  - Secure Flip Latch
  - Mast Secure Chain
  - Continuous Stops
- Painted Roura Green (other colors optional)
- Optional Items are Available Here

RUGGED 3T-3/16-1080

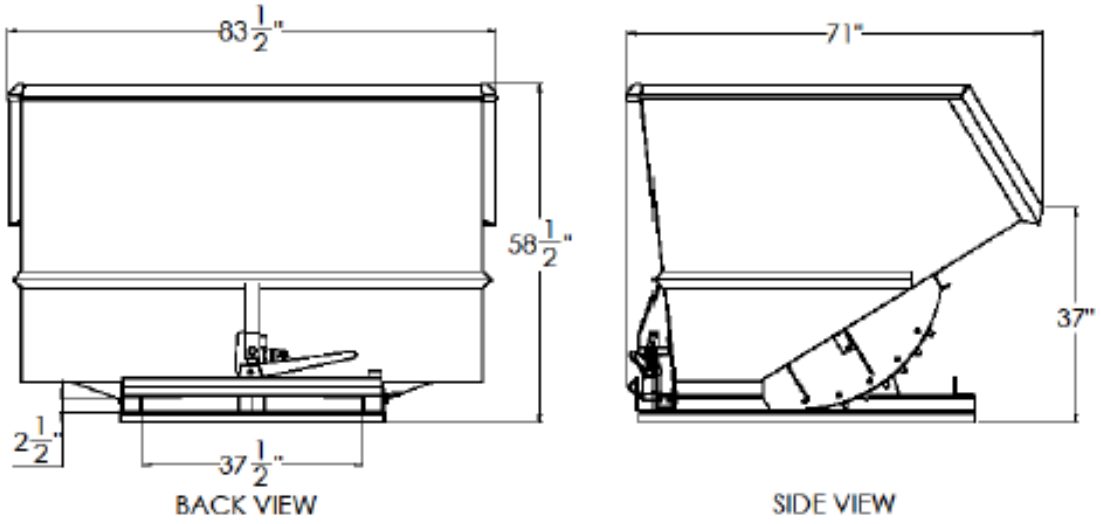

BACK VIEW SIDE VIEW

MODEL #	SIZE	L	W	H	LH	FORK OPENING	LOAD CAPACITY	WEIGHT
3T-3/16-1080	4 CU. YD	71"	83 1/2"	58 1/2"	37"	2 1/2" X 37 1/2"	6,000 LBS	1287 LBS

ROURA BUILT

"FOR ALL OF YOUR MATERIAL HANDLING NEEDS!"