ROURA
MATERIAL HANDLING

Michigan: (800) 968-9070
Mississippi: (800) 654-9147

rouramh.com

Made In the U.S.A.

1 CU YD DE-WATERING HOPPER 6,000 LBS

MODEL #	L	W	H	WEIGHT
DW-270	64 1/2"	39 1/2"	38 1/2"	730 LBS

1 YARD VOLUME CAPACITY

This De-watering hopper is designed for the use in pulp processing, waste treatment plants and any wet application. Roura's De-watering hoppers are available in many sizes for those unique applications.

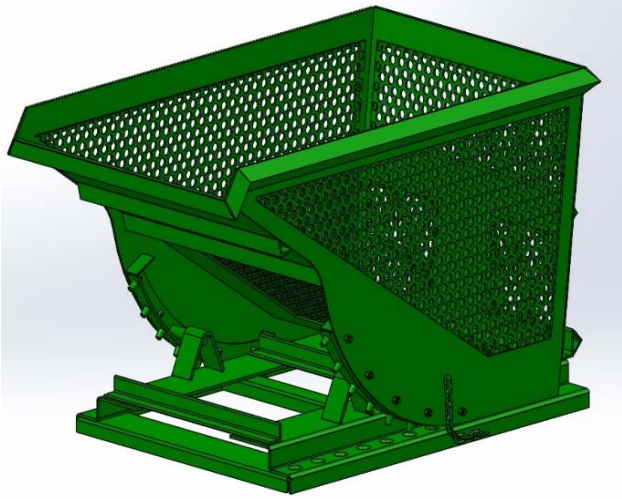

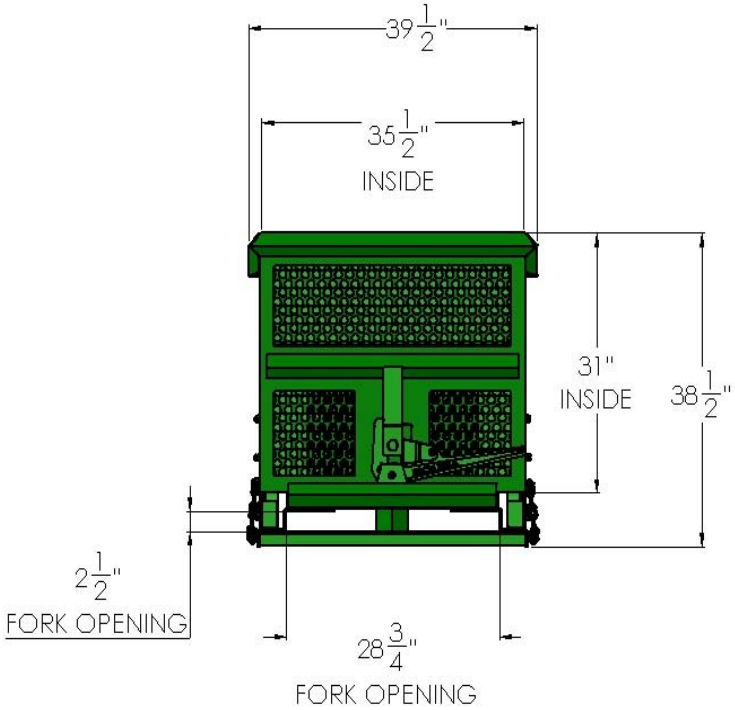

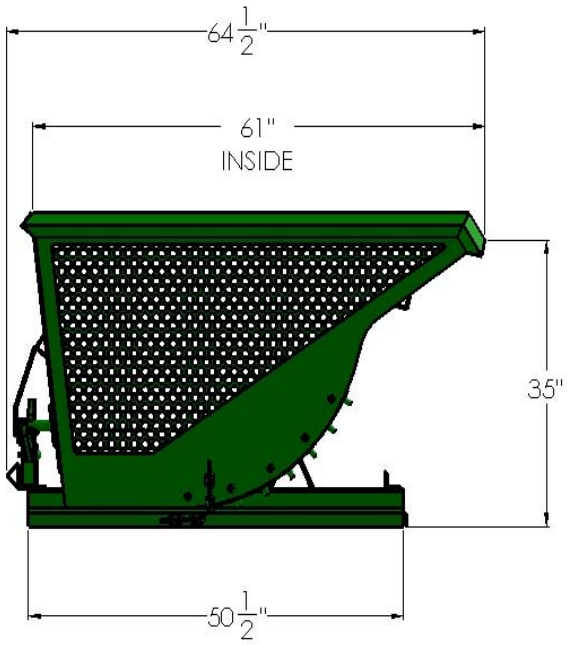

- **<u>COMMON APLICATIONS:</u> PULP, AGGREGATE, WASTE AND ANY WET MATERIAL COLLECTION APPLICATIONS.**
- **1/4" PLATE STEEL BODY WITH PERFORATION PATTERN OF Ø 1/2" HOLES ON 11/16" STAGGERED CENTERS NET 48% OPEN AREA.**
- **6,000 LBS. MAX LOAD CAPACITY.**
- **BRIGHT SAFETY GREEN ENAMEL PAINT (OPTIONAL COLORS AVAILABLE).**
- **CUSTOM SIZES ARE AVAILABLE UPON REQUEST.**

"FOR ALL YOUR MATERIAL HANDLING NEEDS!"