PLASTIC LID HOPPER MODEL

H-PLDB-270 1 CU YD

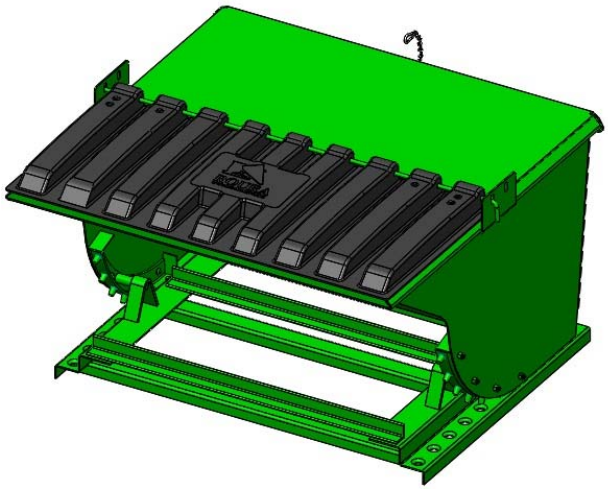

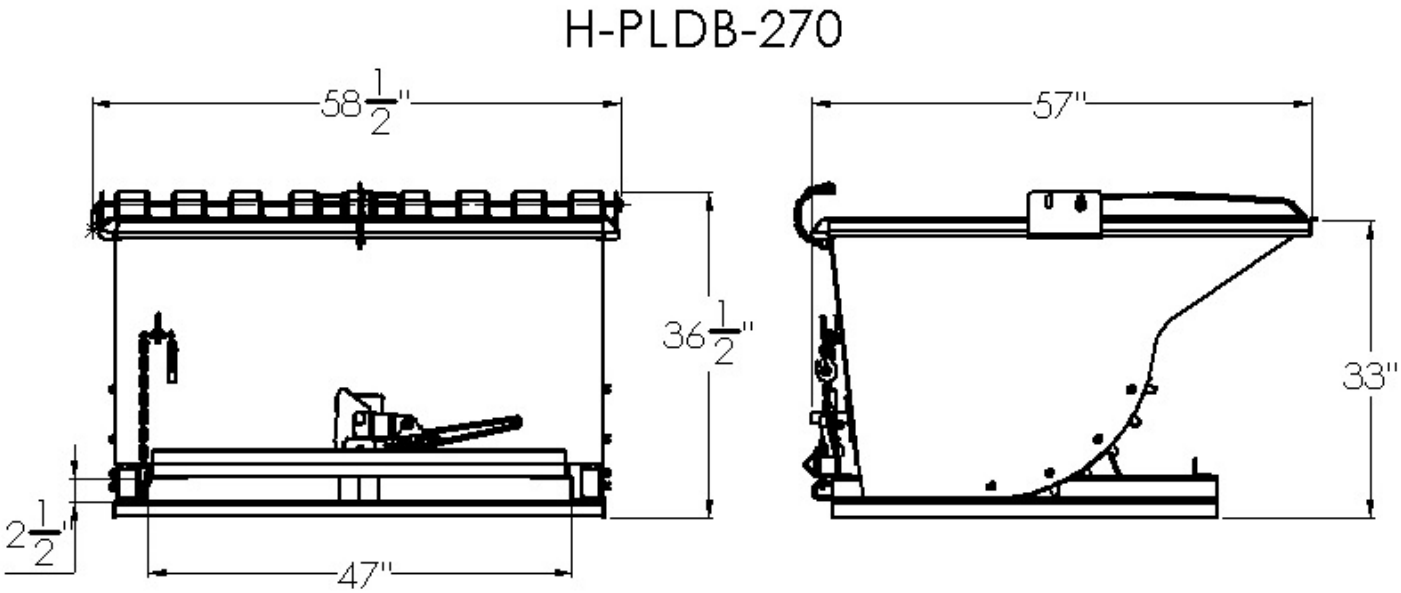

MODEL #	SIZE	L	W	H	LH	FORK OPENING	WEIGHT	CAPACITY
H-PLDB-270	1 CU YD	57”	58 ½”	36 ½”	33”	2 ½” X 47”	694 LBS	6,000 LBS

STANDARD ITEMS

- DUCTILE IRON HANDLE
- SECURE FLIP LATCH
- MAST SECURE CHAIN
- DURABLE SINGLE WALL POLY LID
- DRIP ANGLE FOR LIQUID COLLECTING
- SECURE LID CHAIN (FOR DUMPING PURPOSE)
- PAINTED ROURA GREEN (OPTIONAL COLORS ARE AVAILABLE)