ROURA
MATERIAL HANDLING

Michigan: (800) 968-9070

Mississippi: (800) 654-9147

rouramh.com

RUGGED HOPPER MODEL
3T-3/16-810 3 CU YD

MODEL #	SIZE	L	W	H	LH	FORK OPENING	WEIGHT	CAPACITY
3T-3/16-810	3 CU YD	71”	63 ½”	58 ½”	37”	2 ½” X 28 ¾”	1098 LBS	6000 LBS

RUGGED 3T-3/16-810

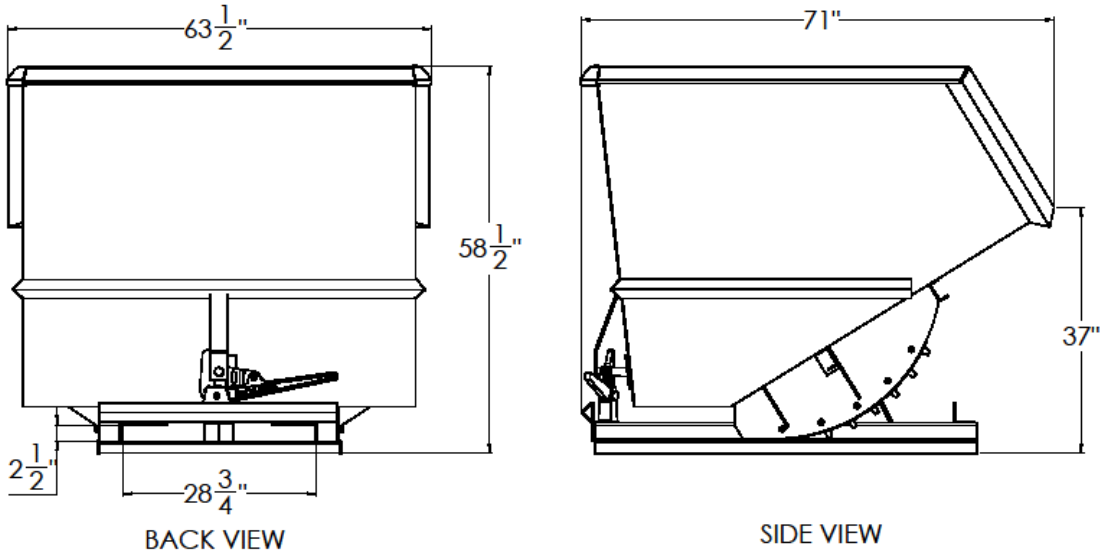

CONSTRUCTION: **7 gauge plate body and 5/16” formed plated base. Bodies are 100% continuous weld for superior construction. Ductile iron handle, standard stops and secure flip latch are standard on this model.**

FINISH: **Bright safety green enamel paint (other colors optional).**

OPTIONAL ITEMS ARE AVAILABLE

“FOR ALL YOUR MATERIAL HANDLING NEEDS!”